嘉尼企業股份有限公司 CANAL ELECTRONIC CO.,LTD.

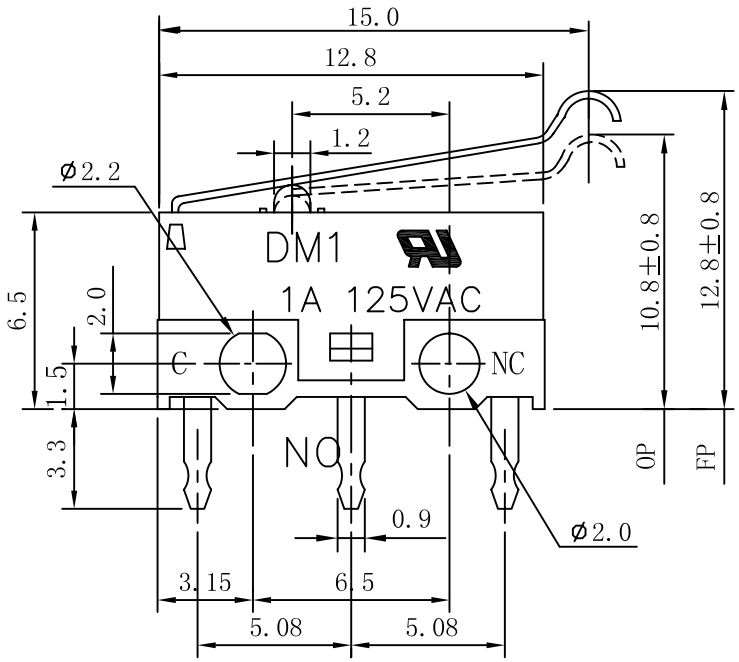

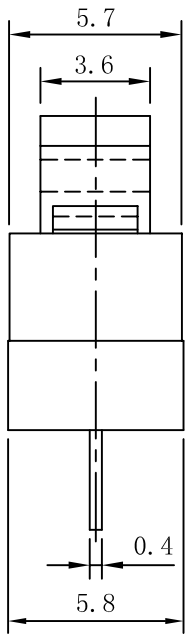

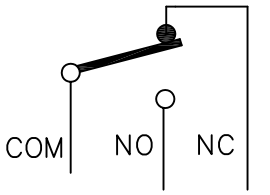

SCHEMATIC

Rating voltage	AC125V / DC5V	Mechanical life	500,000 cycles
Rating current	1A / 30mA	Electrical life	50,000 cycles
Withstand voltage	AC500V 1 minute	Moisture content	< 85% RH
Insulation resistance	≥100MΩ DC500V	Operation force	20±50gf
Contact Resistance	≤100mΩ	Free position	12.8±0.8mm
Soldering temper	245±5℃ 3 Sec.	Operating position	10.8±0.8mm
Temperature range	−25℃ ~ +65℃		

嘉尼企業股份有限公司
研發部
2005.03.07
發圖章

REVISION	DESCRIPION	REVISED BY	TOLEANCES . X±0.2		ANGLE ±½°			UNIT	mm	PART NAME	DM1 SPEC DRAWING	DWG NO
4			DRAWN BY	吳美玉	DESIGNED BY	ERIC	SCALE					WS0054A
3												
2			CHECKED BY	?	APPROVED BY	?	DATE	2005.03.07		PART NO	DM1−02P−30−3	
1 2005.03.07	換新圖框,重新出圖	吳美玉										