IR Receiver Modules for Remote Control Systems

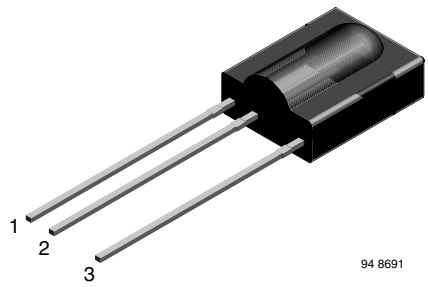

FEATURES

- Very low supply current
- Photo detector and preamplifier in one package
- Internal filter for PCM frequency
- Supply voltage: 2.5 V to 5.5 V
- Improved immunity against ambient light
- Insensitive to supply voltage ripple and noise
- Material categorization:
  for definitions of compliance please see www.vishay.com/doc?99912

Pb-free
e3
RoHS COMPLIANT
HALOGEN FREE
GREEN (5-2008)

MECHANICAL DATA

Pinning:

1 = GND, 2 = V_S, 3 = OUT

DESCRIPTION

The TSOP312.., TSOP314..series are miniaturized IR receiver modules for infrared remote control systems. A PIN diode and a preamplifier are assembled on a leadframe, the epoxy package contains an IR filter.

The demodulated output signal can be directly connected to a microprocessor for decoding.

The TSOP314.. series devices are optimized to suppress almost all spurious pulses from energy saving lamps like CFLs. The AGC4 used in the TSOP314.. may suppress some data signals. The TSOP312.. series are provided primarily for compatibility with old AGC2 designs. New designs should prefer the TSOP314.. series containing the newer AGC4.

These components have not been qualified according to automotive specifications.

PARTS TABLE

AGC		LEGACY, FOR LONG BURST REMOTE CONTROLS (AGC2)	RECOMMENDED FOR LONG BURST CODES (AGC4)
Carrier frequency	30 kHz	TSOP31230	TSOP31430
	33 kHz	TSOP31233	TSOP31433
	36 kHz	TSOP31236	TSOP31436 (1)(2)(3)
	38 kHz	TSOP31238	TSOP31438 (4)(5)
	40 kHz	TSOP31240	TSOP31440
	56 kHz	TSOP31256	TSOP31456 (6)(7)
Package		Cast	
Pinning		1 = GND, 2 = V_S, 3 = OUT	
Dimensions (mm)		10.0 W x 12.5 H x 5.8 D	
Mounting		Leaded	
Application		Remote control	
Best remote control code		(1) RC-5 (2) RC-6 (3) Panasonic (4) NEC (5) Sharp (6) r-step (7) Thomson RCA	

THIS DOCUMENT IS SUBJECT TO CHANGE WITHOUT NOTICE. THE PRODUCTS DESCRIBED HEREIN AND THIS DOCUMENT ARE SUBJECT TO SPECIFIC DISCLAIMERS, SET FORTH AT www.vishay.com/doc?91000

BLOCK DIAGRAM

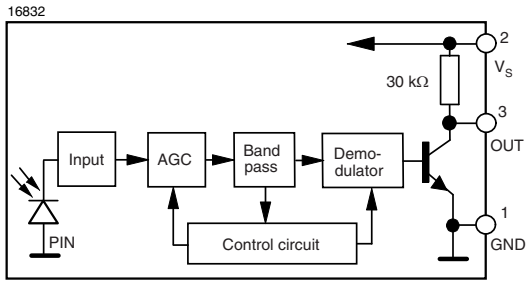

APPLICATION CIRCUIT

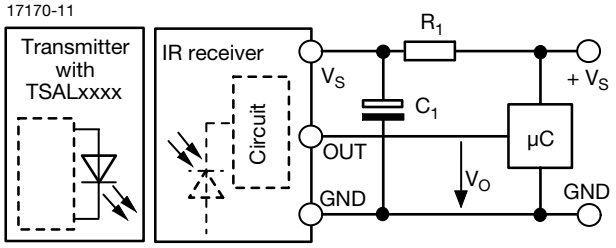

R_1 and C_1 recommended to reduce supply ripple for V_S < 2.8 V

ABSOLUTE MAXIMUM RATINGS				
PARAMETER	**TEST CONDITION**	**SYMBOL**	**VALUE**	**UNIT**
Supply voltage (pin 2)		V_S	-0.3 to +6.0	V
Supply current (pin 2)		I_S	3	mA
Output voltage (pin 3)		V_O	-0.3 to (V_S + 0.3)	V
Output current (pin 3)		I_O	5	mA
Junction temperature		T_j	100	°C
Storage temperature range		T_{stg}	-25 to +85	°C
Operating temperature range		T_{amb}	-25 to +85	°C
Power consumption	$T_{amb} \leq 85$ °C	P_{tot}	10	mW
Soldering temperature	t ≤ 10 s, 1 mm from case	T_{sd}	260	°C

Note

- Stresses beyond those listed under “Absolute Maximum Ratings” may cause permanent damage to the device. This is a stress rating only and functional operation of the device at these or any other conditions beyond those indicated in the operational sections of this specification is not implied. Exposure to absolute maximum rating conditions for extended periods may affect the device reliability.

ELECTRICAL AND OPTICAL CHARACTERISTICS (T_{amb} = 25 °C, unless otherwise specified)						
PARAMETER	**TEST CONDITION**	**SYMBOL**	**MIN.**	**TYP.**	**MAX.**	**UNIT**
Supply current (pin 2)	E_v = 0, V_S = 3.3 V	I_{SD}	0.27	0.35	0.45	mA
	E_v = 40 klx, sunlight	I_{SH}	-	0.45	-	mA
Supply voltage		V_S	2.5	-	5.5	V
Transmission distance	E_v = 0, test signal see Fig. 1, IR diode TSAL6200, I_F = 200 mA	d	-	45	-	m
Output voltage low (pin 3)	I_{OSL} = 0.5 mA, E_e = 0.7 mW/m², test signal see Fig. 1	V_{OSL}	-	-	100	mV
Minimum irradiance	Pulse width tolerance: $t_{pi} - 5/f_o < t_{po} < t_{pi} + 6/f_o$, test signal see Fig. 1	$E_{e\ min.}$	-	0.12	0.25	mW/m²
Maximum irradiance	$t_{pi} - 5/f_o < t_{po} < t_{pi} + 6/f_o$, test signal see Fig. 1	$E_{e\ max.}$	30	-	-	W/m²
Directivity	Angle of half transmission distance	$\varphi_{1/2}$	-	± 45	-	deg

TYPICAL CHARACTERISTICS (T_{amb} = 25 °C, unless otherwise specified)

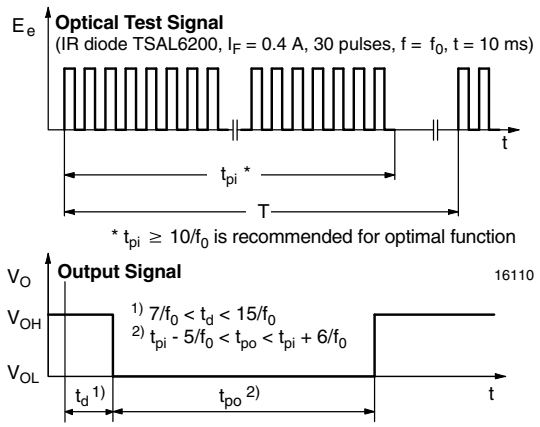

Fig. 1 - Output Active Low

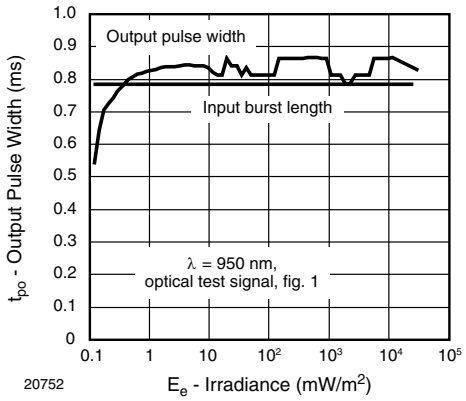

Fig. 2 - Pulse Length and Sensitivity in Dark Ambient

THIS DOCUMENT IS SUBJECT TO CHANGE WITHOUT NOTICE. THE PRODUCTS DESCRIBED HEREIN AND THIS DOCUMENT ARE SUBJECT TO SPECIFIC DISCLAIMERS, SET FORTH AT www.vishay.com/doc?91000

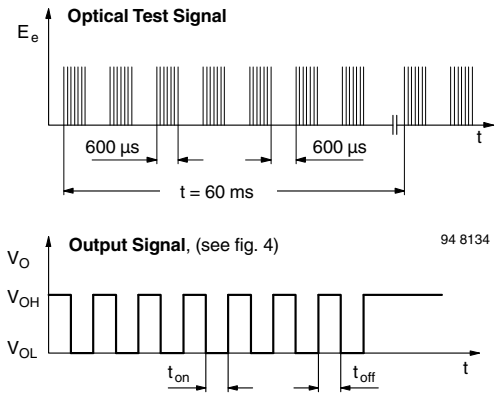

Fig. 3 - Output Function

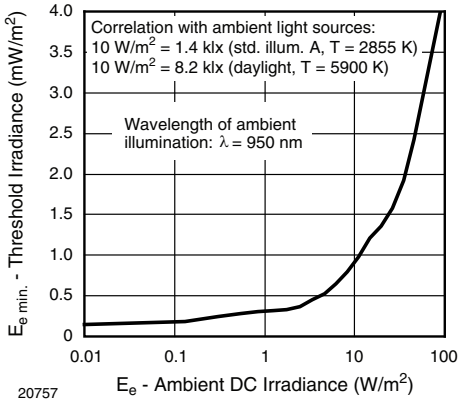

Fig. 6 - Sensitivity in Bright Ambient

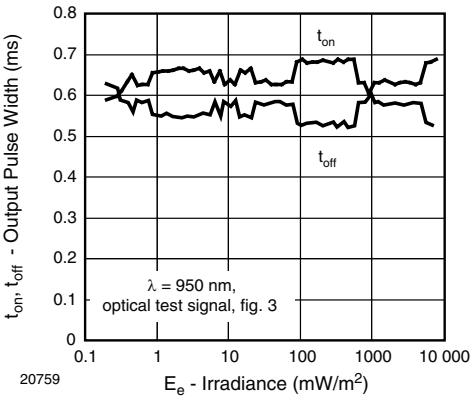

Fig. 4 - Output Pulse Diagram

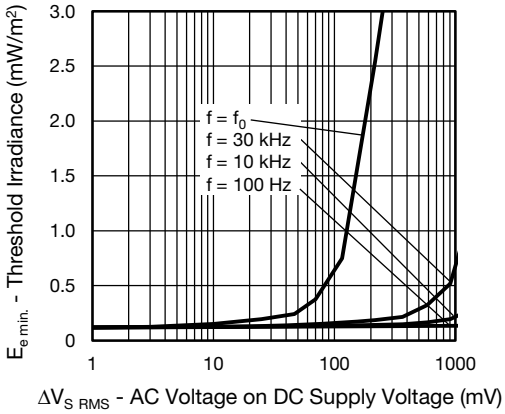

Fig. 7 - Sensitivity vs. Supply Voltage Disturbances

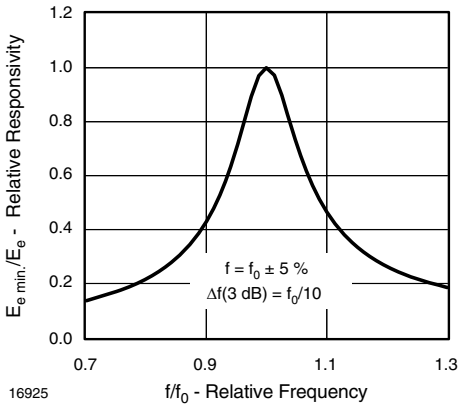

Fig. 5 - Frequency Dependence of Responsivity

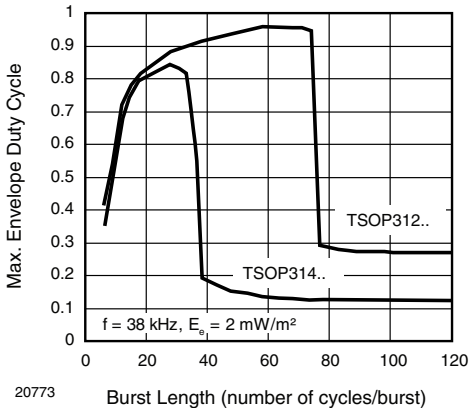

Fig. 8 - Maximum Envelope Duty Cycle vs. Burst Length

THIS DOCUMENT IS SUBJECT TO CHANGE WITHOUT NOTICE. THE PRODUCTS DESCRIBED HEREIN AND THIS DOCUMENT ARE SUBJECT TO SPECIFIC DISCLAIMERS, SET FORTH AT www.vishay.com/doc?91000

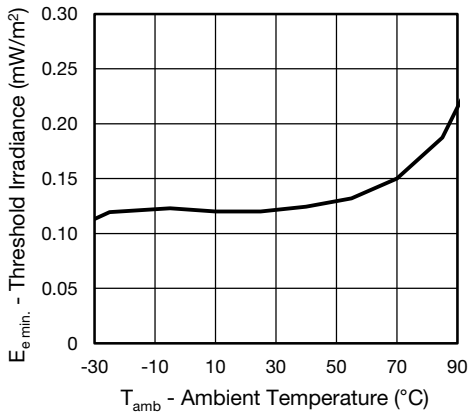

Fig. 9 - Sensitivity vs. Ambient Temperature

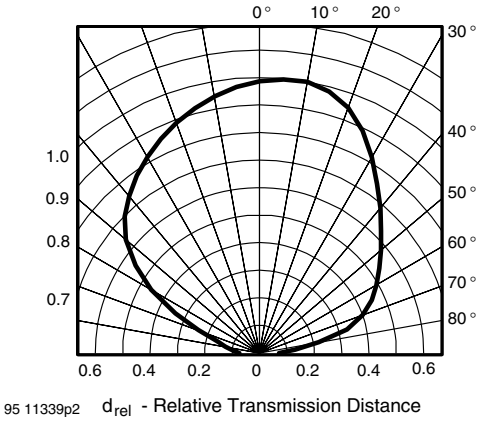

Fig. 12 - Vertical Directivity

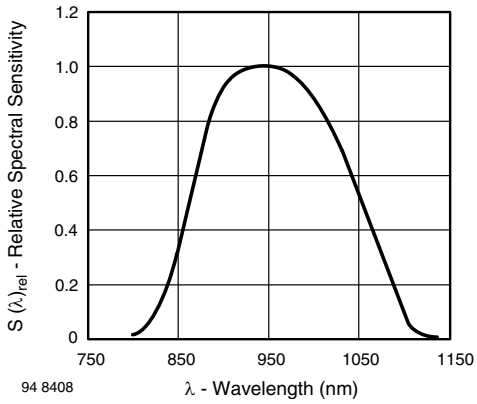

Fig. 10 - Relative Spectral Sensitivity vs. Wavelength

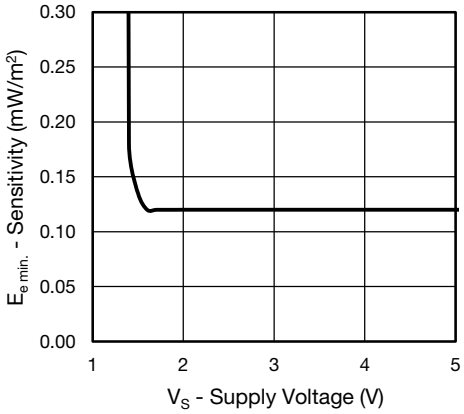

Fig. 13 - Sensitivity vs. Supply Voltage

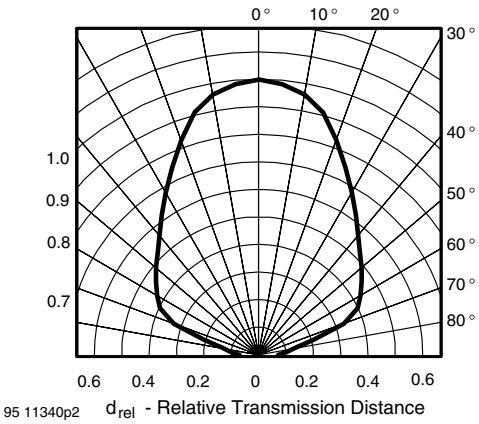

Fig. 11 - Horizontal Directivity

THIS DOCUMENT IS SUBJECT TO CHANGE WITHOUT NOTICE. THE PRODUCTS DESCRIBED HEREIN AND THIS DOCUMENT ARE SUBJECT TO SPECIFIC DISCLAIMERS, SET FORTH AT www.vishay.com/doc?91000

SUITABLE DATA FORMAT

This series is designed to suppress spurious output pulses due to noise or disturbance signals. The devices can distinguish data signals from noise due to differences in frequency, burst length, and envelope duty cycle. The data signal should be close to the device's band-pass center frequency (e.g. 38 kHz) and fulfill the conditions in the table below.

When a data signal is applied to the product in the presence of a disturbance, the sensitivity of the receiver is automatically reduced by the AGC to insure that no spurious pulses are present at the receiver's output. Some examples which are suppressed are:

- DC light (e.g. from tungsten bulbs sunlight)
- Continuous signals at any frequency
- Strongly or weakly modulated patterns from fluorescent lamps with electronic ballasts (see Fig. 14 or Fig. 15).

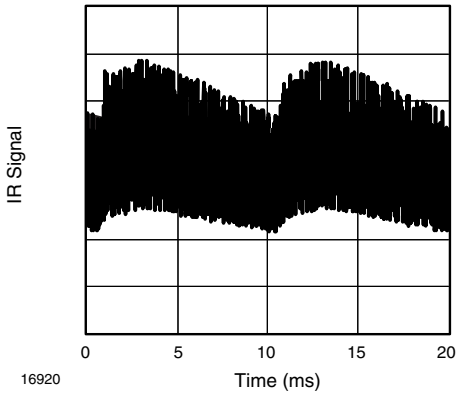

Fig. 14 - IR Disturbance from Fluorescent Lamp with Low Modulation

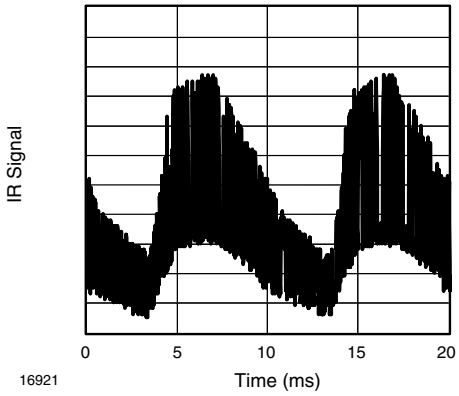

Fig. 15 - IR Disturbance from Fluorescent Lamp with High Modulation

	TSOP312..	TSOP314..
Minimum burst length	10 cycles/burst	10 cycles/burst
After each burst of length a minimum gap time is required of	10 to 70 cycles ≥ 10 cycles	10 to 35 cycles ≥ 10 cycles
For bursts greater than a minimum gap time in the data stream is needed of	70 cycles > 4 x burst length	35 cycles > 10 x burst length
Maximum number of continuous short bursts/second	1800	1500
NEC code	Yes	Preferred
RC5/RC6 code	Yes	Preferred
Thomson 56 kHz code	Yes	Preferred
Sharp code	Yes	Preferred
Suppression of interference from fluorescent lamps	Mild disturbance patterns are suppressed (example: signal pattern of Fig. 14)	Complex and critical disturbance patterns are suppressed (example: signal pattern of Fig. 15 or highly dimmed LCDs)

Notes

- For data formats with short bursts please see the datasheet for TSOP311.., TSOP313..
- For SIRCS 15 and 20 bit, Sony 12 bit IR codes, please see the datasheet for TSOP31S40

THIS DOCUMENT IS SUBJECT TO CHANGE WITHOUT NOTICE. THE PRODUCTS DESCRIBED HEREIN AND THIS DOCUMENT ARE SUBJECT TO SPECIFIC DISCLAIMERS, SET FORTH AT www.vishay.com/doc?91000

PACKAGE DIMENSIONS in millimeters

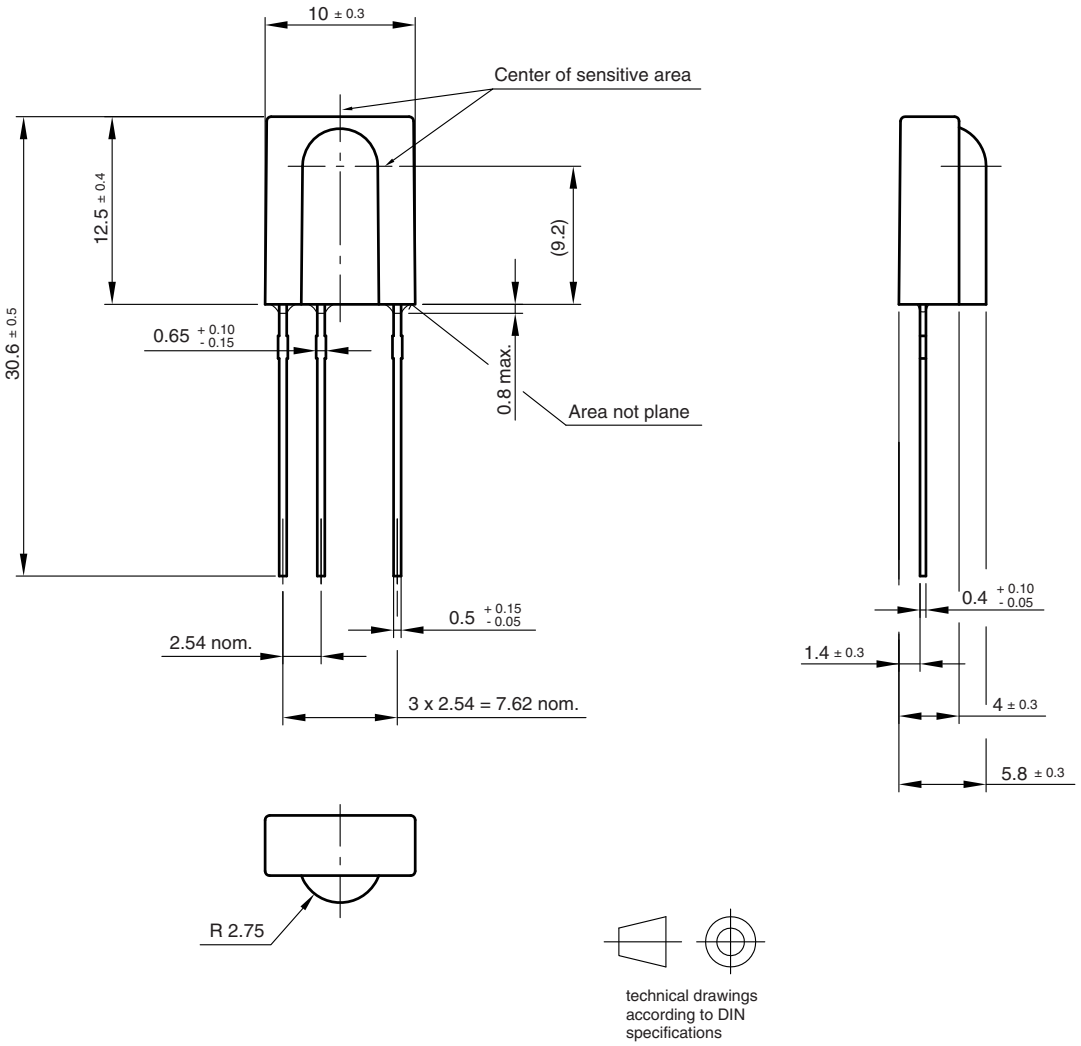

Drawing-No.: 6.550-5095.01-4
Issue: 20; 15.03.10
96 12116

THIS DOCUMENT IS SUBJECT TO CHANGE WITHOUT NOTICE. THE PRODUCTS DESCRIBED HEREIN AND THIS DOCUMENT ARE SUBJECT TO SPECIFIC DISCLAIMERS, SET FORTH AT www.vishay.com/doc?91000

IR Receiver Modules for Remote Control Systems

Vishay offers stock Cast IR Receivers in three different packages:

- Loose packed in tubes and mounted on tape for reel or ammopack
- Vishay IR receiver with plastic holders are packed in plastic tubes

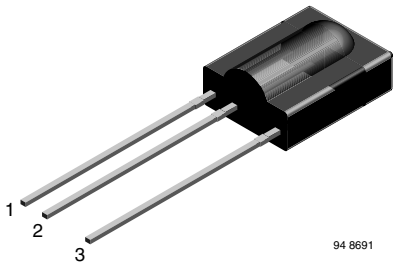

FEATURES

- Material categorization:
  For definitions of compliance please see www.vishay.com/doc?99912

Pb-free

e3

RoHS COMPLIANT

GREEN (5-2008)

AVAILABLE FOR

- TSOP312..
- TSOP311..
- TSOP12...
- TSOP11...
- TSOP13...
- TSOP313..
- TSOP314..
- TSOP315..
- TSMP1138

LOOSE PACKED IN TUBE

ORDERING INFORMATION

T	S	d	P	d	d	d	d	d

2 or 3 digit product series — 2 digit frequency

O = for IR receiver applications
M = for repeater/learning applications

Note

- d = “digit”, please consult the list of available devices create a valid part number.

EXAMPLE: TSOP1238

PACKAGING QUANTITY

- 50 pieces per tube
- 20 tubes per carton

PACKAGING DIMENSIONS in millimeters

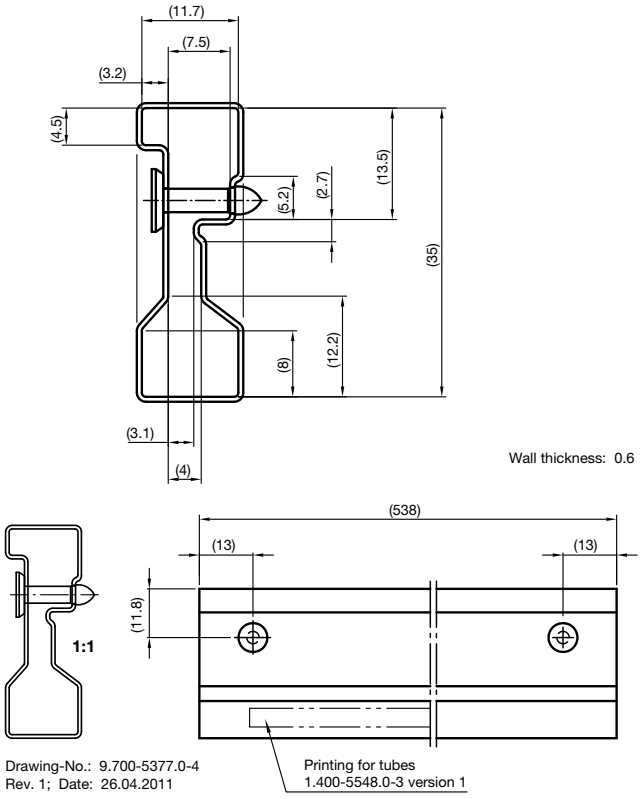

THIS DOCUMENT IS SUBJECT TO CHANGE WITHOUT NOTICE. THE PRODUCTS DESCRIBED HEREIN AND THIS DOCUMENT ARE SUBJECT TO SPECIFIC DISCLAIMERS, SET FORTH AT www.vishay.com/doc?91000

TAPE AND REEL/AMMOPACK

Up to 3 consecutive components may be missing if the gap is followed by at least 6 components. A maximum of 0.5 % of the components per reel quantity may be missing. At least 5 empty positions are present at the start and the end of the tape to enable insertion.

Tensile strength of the tape: > 15 N

Pulling force in the plane of the tape, at right angles to the reel: > 5 N

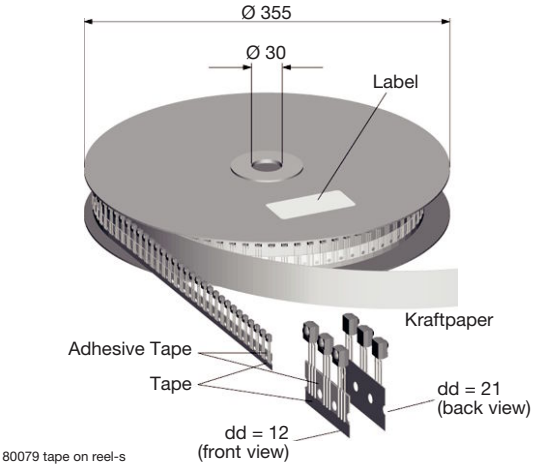

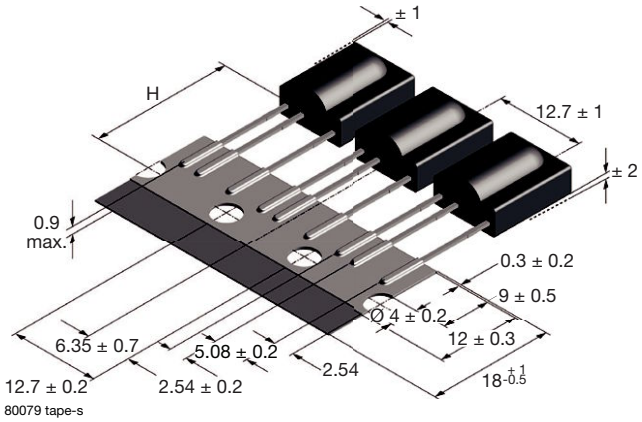

VERSION	DIMENSION "H"
BS	20 ± 0.5
PS	23.3 ± 0.5
OS	26 ± 0.5

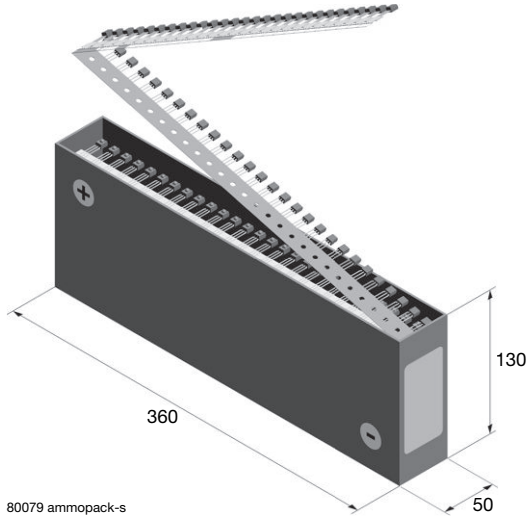

ORDERING INFORMATION

T	S	d	P	d	d	d	d	d	S	S	1	d	d	d	d	Z
O = for IR receiver applications M = for repeater/learning applications				2 or 3 digit product series			2 digit frequency		SS1 for T and R, bulk or ammopack			dd = BS, PS, or OS		Tape and reel	dd = 12 or 21	Ammopack

Note

- d = "digit", please consult the list of available devices create a valid part number.

EXAMPLE: TSOP1238SS1BS12

TSOP1238SS1BS12Z

PACKAGING QUANTITY

- 1000 pieces per reel
- 1000 pieces per ammopack

THIS DOCUMENT IS SUBJECT TO CHANGE WITHOUT NOTICE. THE PRODUCTS DESCRIBED HEREIN AND THIS DOCUMENT ARE SUBJECT TO SPECIFIC DISCLAIMERS, SET FORTH AT www.vishay.com/doc?91000

OUTER PACKAGING

CARTON BOX DIMENSIONS in millimeters

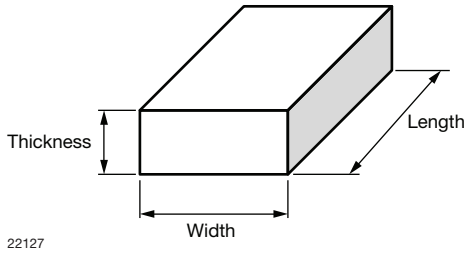

KINDS OF CARTON BOX	THICKNESS	WIDTH	LENGTH
Packaging Plastic Tubes (Normal/auxiliary devices)	82	152	564
Tape and Reel Box (Taping in reels)	400	310	410
Ammo-Box (Zigzag taping)	50	130	350

THIS DOCUMENT IS SUBJECT TO CHANGE WITHOUT NOTICE. THE PRODUCTS DESCRIBED HEREIN AND THIS DOCUMENT ARE SUBJECT TO SPECIFIC DISCLAIMERS, SET FORTH AT www.vishay.com/doc?91000

Disclaimer

ALL PRODUCT, PRODUCT SPECIFICATIONS AND DATA ARE SUBJECT TO CHANGE WITHOUT NOTICE TO IMPROVE RELIABILITY, FUNCTION OR DESIGN OR OTHERWISE.

Vishay Intertechnology, Inc., its affiliates, agents, and employees, and all persons acting on its or their behalf (collectively, "Vishay"), disclaim any and all liability for any errors, inaccuracies or incompleteness contained in any datasheet or in any other disclosure relating to any product.

Vishay makes no warranty, representation or guarantee regarding the suitability of the products for any particular purpose or the continuing production of any product. To the maximum extent permitted by applicable law, Vishay disclaims (i) any and all liability arising out of the application or use of any product, (ii) any and all liability, including without limitation special, consequential or incidental damages, and (iii) any and all implied warranties, including warranties of fitness for particular purpose, non-infringement and merchantability.

Statements regarding the suitability of products for certain types of applications are based on Vishay's knowledge of typical requirements that are often placed on Vishay products in generic applications. Such statements are not binding statements about the suitability of products for a particular application. It is the customer's responsibility to validate that a particular product with the properties described in the product specification is suitable for use in a particular application. Parameters provided in datasheets and / or specifications may vary in different applications and performance may vary over time. All operating parameters, including typical parameters, must be validated for each customer application by the customer's technical experts. Product specifications do not expand or otherwise modify Vishay's terms and conditions of purchase, including but not limited to the warranty expressed therein.

Except as expressly indicated in writing, Vishay products are not designed for use in medical, life-saving, or life-sustaining applications or for any other application in which the failure of the Vishay product could result in personal injury or death. Customers using or selling Vishay products not expressly indicated for use in such applications do so at their own risk. Please contact authorized Vishay personnel to obtain written terms and conditions regarding products designed for such applications.

No license, express or implied, by estoppel or otherwise, to any intellectual property rights is granted by this document or by any conduct of Vishay. Product names and markings noted herein may be trademarks of their respective owners.