100410 Probe

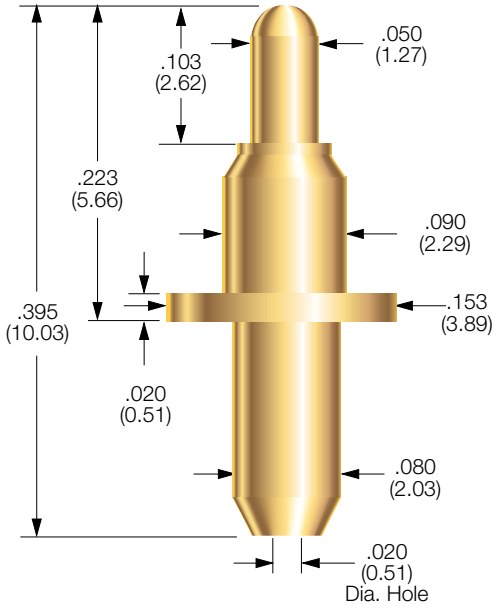

Probe Specifications

Minimum Centers: .175 (4.45)
Current Rating: 15 amps continuous
(Individual probe in free air @ ambient temperature)
Spring Force: 6.2 oz. (176g) @ .060 (1.52) travel
Typical Resistance: < 5 mΩ
Maximum Travel: .090 (2.29)
Working Travel: .060 (1.52)

Materials

Barrel: Nickel/silver, gold plated
Spring: Stainless steel
Plunger: Beryllium copper, gold plated
Bias Ball: Stainless steel

How to Order

100410-005

101119 Probe

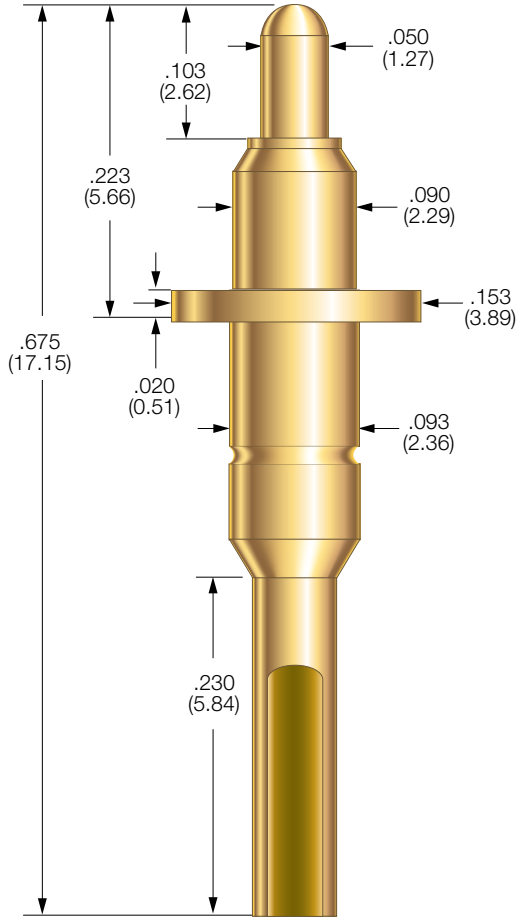

Probe Specifications

Minimum Centers: .175 (4.45)
Current Rating: 15 amps continuous
(Individual probe in free air @ ambient temperature)
Spring Force: 6.2 oz. (176g) @ .060 (1.52) travel
Typical Resistance: < 10 mΩ
Maximum Travel: .090 (2.29)
Working Travel: .060 (1.52)

Materials

Barrel: Nickel/silver, gold plated
Spring: Stainless steel
Plunger: Beryllium copper, gold plated
Bias Ball: Stainless steel
Receptacle: Nickel/silver, gold plated

How to Order

101119-001

Specifications subject to change without notice. Dimensions in inches (millimeters)

Mouser Electronics

Authorized Distributor

Click to View Pricing, Inventory, Delivery & Lifecycle Information:

IDI:
100410-005 101119-001