ARPV-ST12100 (12V, 8.4A, 100W)

ARPV-ST24100 (24V, 4.2A, 100W)

ARPV-ST48100 (48V, 2.1A, 100W)

Full sealed aluminum case
Fully encapsulated with IP67 level
Protections: Over load/Short circuit
100% full load burn-in test
Case: 621 Size: 220.5×70×43mm

AC input voltage range.....176-264VAC
Input frequency.....47-63Hz
Line regulation (full load)..... ±0.5%
Output over load protection....105%-150% hiccup mode, auto-recovery
Rise; hold up time.....100mS 10mS at full load
Withstand voltage.....I/P-O/P, I/P-FG: 1.5KVAC, O/P-FG: 0.5KVAC,1 min
Working temperature.....-30˚C~+60˚C@ (refer to temperature derating curve)
Storage temperature.....-40˚C~+85˚C@100% 20%~95%RH (non condensing)
Safety standards.....UL1310, class 2, TUV, EN60950-1, EN61347-2-13
Cooling method.....Free air cooling convection
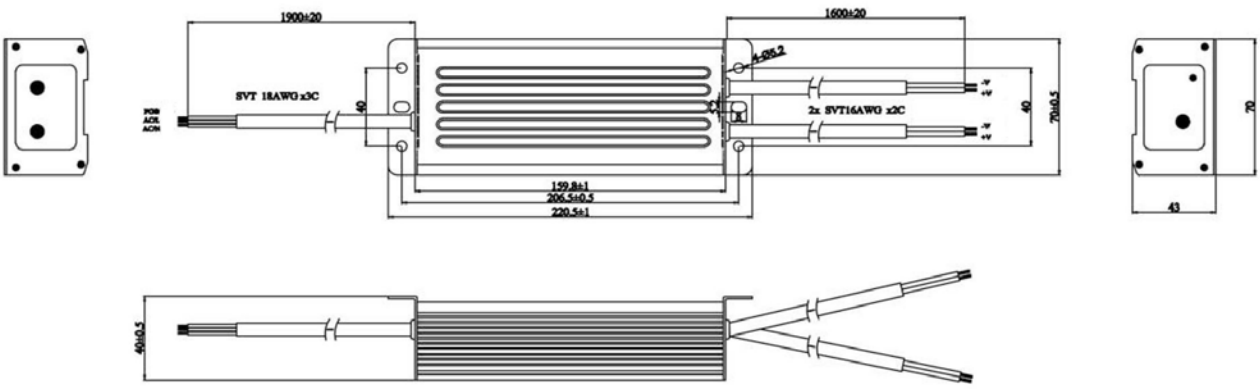
Product model	DC output	Tol.	R&N	Efficiency
ARPV-ST12100	12V,0~8.4A	±3%	120mV	86%
ARPV-ST24100	24V,0~4.2A	±2%	240mV	87%
ARPV-ST48100	48V,0~2.1A	±1%	480mV	88%