IN74AC153

Dual 4-Input Data Selector/Multiplexer
High-Speed Silicon-Gate CMOS

The IN74AC153 is identical in pinout to the LS/ALS153, HC/HCT153. The device inputs are compatible with standard CMOS outputs; with pullup resistors, they are compatible with LS/ALS outputs.

The Address Inputs select one of four Data Inputs from each multiplexer. Each multiplexer has an active-low Strobe control and a noninverting output.

- Outputs Directly Interface to CMOS, NMOS, and TTL
- Operating Voltage Range: 2.0 to 6.0 V
- Low Input Current: 1.0 µA; 0.1 µA @ 25°C
- High Noise Immunity Characteristic of CMOS Devices
- Output Source/Sink 24 mA

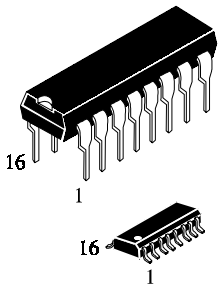

ORDERING INFORMATION
IN74AC153N Plastic
IN74AC153D SOIC
T_A = -40° to 85° C for all packages

LOGIC DIAGRAM

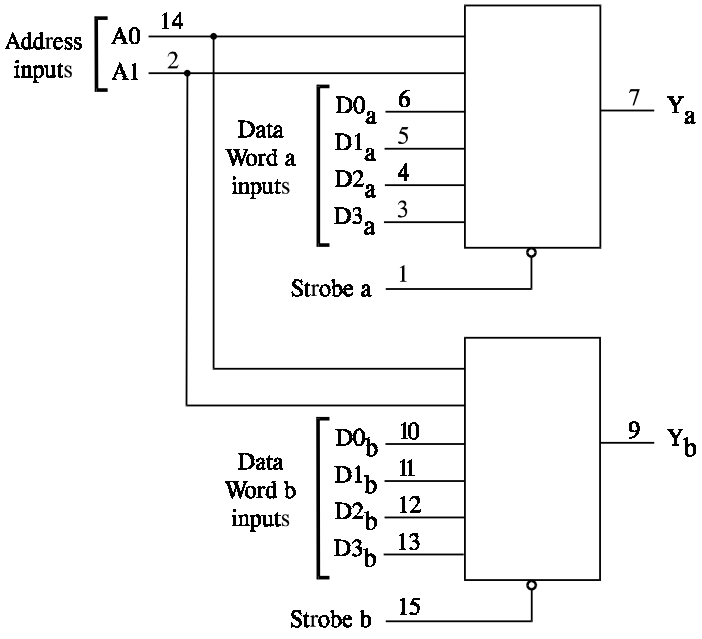

PIN 16 =V_{CC}
PIN 8 = GND

PIN ASSIGNMENT

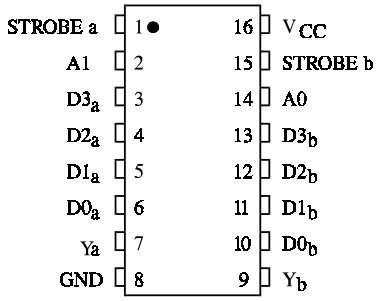

FUNCTION TABLE

Inputs			Output
A1	A0	Strobe	Y
X	X	H	L
L	L	L	D0
L	H	L	D1
H	L	L	D2
H	H	L	D3

D0,D1...D3=the level of the respective Data Input
X = don't care

Downloaded from DatasheetLib.com - datasheet search engine

MAXIMUM RATINGS*

Symbol	Parameter	Value	Unit
V_{CC}	DC Supply Voltage (Referenced to GND)	-0.5 to +7.0	V
V_{IN}	DC Input Voltage (Referenced to GND)	-0.5 to V_{CC} +0.5	V
V_{OUT}	DC Output Voltage (Referenced to GND)	-0.5 to V_{CC} +0.5	V
I_{IN}	DC Input Current, per Pin	±20	mA
I_{OUT}	DC Output Sink/Source Current, per Pin	±50	mA
I_{CC}	DC Supply Current, V_{CC} and GND Pins	±50	mA
P_D	Power Dissipation in Still Air, Plastic DIP+ SOIC Package+	750 500	mW
Tstg	Storage Temperature	-65 to +150	°C
T_L	Lead Temperature, 1 mm from Case for 10 Seconds (Plastic DIP or SOIC Package)	260	°C

*Maximum Ratings are those values beyond which damage to the device may occur.
Functional operation should be restricted to the Recommended Operating Conditions.
+Derating - Plastic DIP: - 10 mW/°C from 65° to 125°C
SOIC Package: : - 7 mW/°C from 65° to 125°C

RECOMMENDED OPERATING CONDITIONS

Symbol	Parameter		Min	Max	Unit
V_{CC}	DC Supply Voltage (Referenced to GND)		2.0	6.0	V
V_{IN}, V_{OUT}	DC Input Voltage, Output Voltage (Referenced to GND)		0	V_{CC}	V
T_J	Junction Temperature (PDIP)			140	°C
T_A	Operating Temperature, All Package Types		-40	+85	°C
I_{OH}	Output Current - High			-24	mA
I_{OL}	Output Current - Low			24	mA
t_r, t_f	Input Rise and Fall Time *	V_{CC} =3.0 V	0	150	ns/V
	(except Schmitt Inputs)	V_{CC} =4.5 V	0	40	
		V_{CC} =5.5 V	0	25	

* V_{IN} from 30% to 70% V_{CC}

This device contains protection circuitry to guard against damage due to high static voltages or electric fields. However, precautions must be taken to avoid applications of any voltage higher than maximum rated voltages to this high-impedance circuit. For proper operation, V_{IN} and V_{OUT} should be constrained to the range GND≤(V_{IN} or V_{OUT})≤V_{CC}.

Unused inputs must always be tied to an appropriate logic voltage level (e.g., either GND or V_{CC}). Unused outputs must be left open.

Downloaded from DatasheetLib.com - datasheet search engine

DC ELECTRICAL CHARACTERISTICS(Voltages Referenced to GND)

Symbol	Parameter	Test Conditions	V_{CC} V	Guaranteed Limits		Unit
				25 °C	-40°C to 85°C	
V_{IH}	Minimum High-Level Input Voltage	V_{OUT}=0.1 V or V_{CC}-0.1 V	3.0 4.5 5.5	2.1 3.15 3.85	2.1 3.15 3.85	V
V_{IL}	Maximum Low - Level Input Voltage	V_{OUT}=0.1 V or V_{CC}-0.1 V	3.0 4.5 5.5	0.9 1.35 1.65	0.9 1.35 1.65	V
V_{OH}	Minimum High-Level Output Voltage	$I_{OUT} \leq$ -50 µA	3.0 4.5 5.5	2.9 4.4 5.4	2.9 4.4 5.4	V
		*V_{IN}=V_{IH} or V_{IL} I_{OH}=-12 mA I_{OH}=-24 mA I_{OH}=-24 mA	 3.0 4.5 5.5	 2.56 3.86 4.86	 2.46 3.76 4.76	
V_{OL}	Maximum Low-Level Output Voltage	$I_{OUT} \leq$ 50 µA	3.0 4.5 5.5	0.1 0.1 0.1	0.1 0.1 0.1	V
		*V_{IN}= V_{IH} or V_{IL} I_{OL}=12 mA I_{OL}=24 mA I_{OL}=24 mA	 3.0 4.5 5.5	 0.36 0.36 0.36	 0.44 0.44 0.44	
I_{IN}	Maximum Input Leakage Current	V_{IN}=V_{CC} or GND	5.5	±0.1	±1.0	µA
I_{OLD}	+Minimum Dynamic Output Current	V_{OLD}=1.65 V Max	5.5		75	mA
I_{OHD}	+Minimum Dynamic Output Current	V_{OHD}=3.85 V Min	5.5		-75	mA
I_{CC}	Maximum Quiescent Supply Current (per Package)	V_{IN}=V_{CC} or GND	5.5	8.0	80	µA

* All outputs loaded; thresholds on input associated with output under test.
+Maximum test duration 2.0 ms, one output loaded at a time.
Note: I_{IN} and I_{CC} @ 3.0 V are guaranteed to be less than or equal to the respective limit @ 5.5 V V_{CC}

Downloaded from DatasheetLib.com - datasheet search engine

AC ELECTRICAL CHARACTERISTICS(C_L=50pF,Input t_r=t_f=3.0 ns)

Symbol	Parameter	V_{CC}* V	Guaranteed Limits				Unit
			25 °C		-40°C to 85°C		
			Min	Max	Min	Max	
t_{PLH}	Propagation Delay, Input A to Output Y (Figure 2)	3.3 5.0	2.5 2.0	15.0 11.0	2.5 2.0	17.5 12.5	ns
t_{PHL}	Propagation Delay, Input A to Output Y (Figure 2)	3.3 5.0	3.0 2.5	14.5 11.0	2.5 2.0	16.5 12.0	ns
t_{PLH}	Propagation Delay, Strobe to Output Y (Figure 3)	3.3 5.0	2.5 1.5	13.5 9.5	2.0 1.5	16.0 11.0	ns
t_{PHL}	Propagation Delay, Strobe to Output Y (Figure 3)	3.3 5.0	2.5 2.0	11.0 8.0	2.0 1.5	12.5 9.0	ns
t_{PLH}	Propagation Delay, Input D to Output Y (Figure 1)	3.3 5.0	2.5 1.5	12.5 9.0	2.0 1.5	14.5 10.5	ns
t_{PHL}	Propagation Delay, Input D to Output Y (Figure 1)	3.3 5.0	1.5 1.5	11.5 8.5	1.5 1.5	13.0 10.0	ns
C_{IN}	Maximum Input Capacitance	5.0	4.5		4.5		pF

		Typical @25°C,V_{CC}=5.0 V	
C_{PD}	Power Dissipation Capacitance	65	pF

*Voltage Range 3.3 V is 3.3 V ±0.3 V
Voltage Range 5.0 V is 5.0 V ±0.5 V

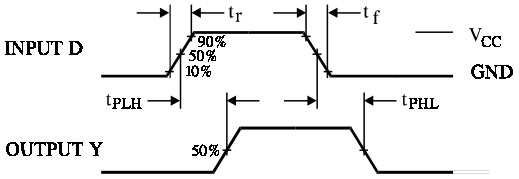

Figure 1. Switching Waveforms

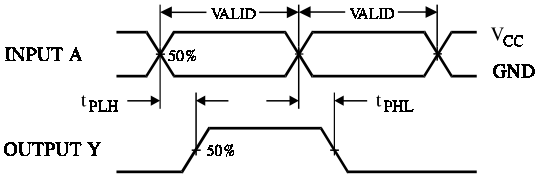

Figure 2. Switching Waveforms

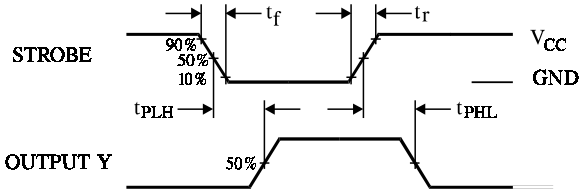

Figure 3. Switching Waveforms

Downloaded from DatasheetLib.com - datasheet search engine

EXPANDED LOGIC DIAGRAM

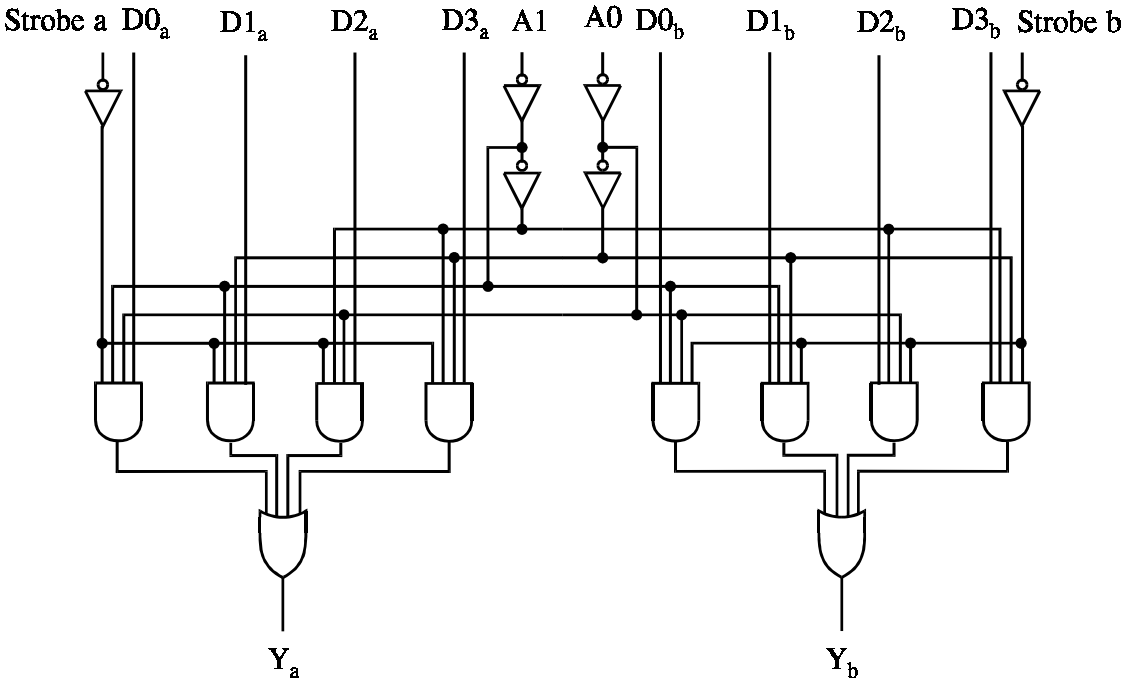

Downloaded from DatasheetLib.com - datasheet search engine